CISA®

ALLEGION™

Door closers D5200 series

CISA D5200 series asymmetric rack and pinion door closers – easy opening and a compact design

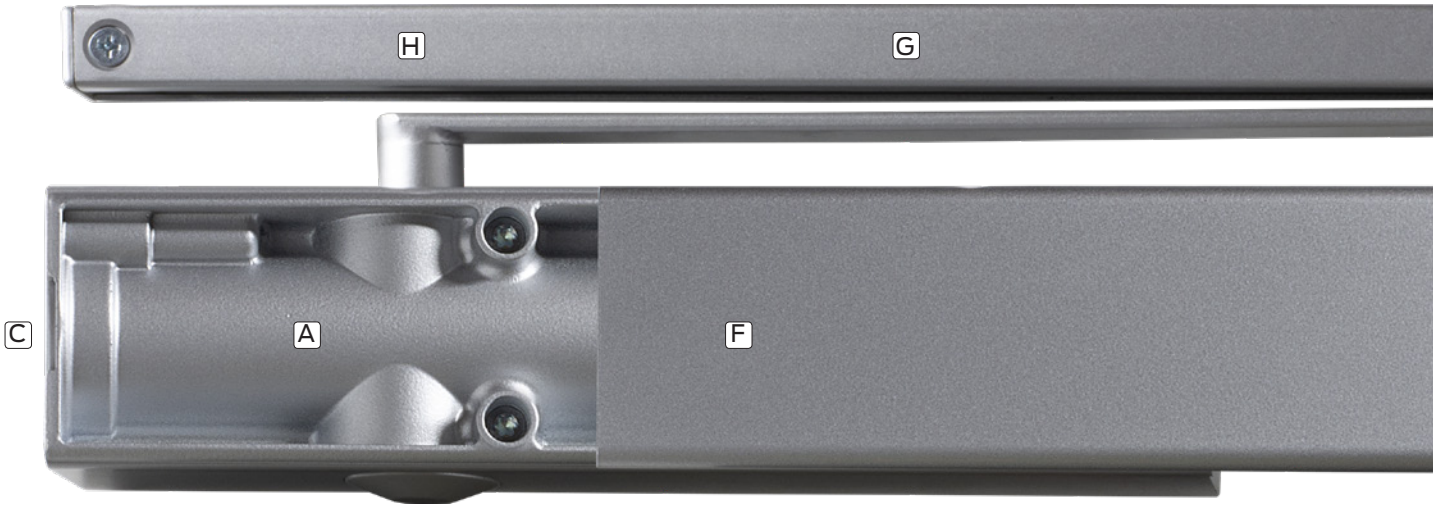

The CISA D5200 series guarantees exceptional ease of use by reducing the resistance encountered when opening the door.

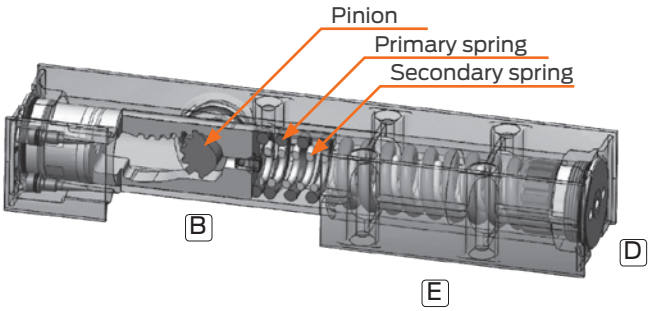

Easy opening, reliable closing

In contrast to conventional door closers, asymmetric rack and pinion technology ensures maximum opening efficiency. The initial opening power decreases rapidly, allowing even children and the elderly to open the door easily.

The CISA D5200 series is CE marked to EN1154 and fire tested to EN1634 – 1 with a 2-hour fire rating on wooden doors **(installation with plate 1.07153.15.0 mandatory)**.

EN 1154

CISA D5200 door closer with sliding trimplate which covers the fixing holes.

Features and benefits

A The CISA D5200 series has an aluminium pressure die-cast body.

B The high-performance asymmetric rack and pinion technology makes the door closer extremely efficient, ensuring maximum reliability and closing power on fire doors, while still making them easy to open.

C The lateral adjustment valves and the asymmetric rack and pinion technology mean it can be mounted on either the hinge or opposite side with the body fixed to the door.

D The power can be adjusted, so installers can adapt the door closer to the size and position of the door.

E The hydraulic fluid and built-in temperature compensation ensure reliable performance in temperatures from -15°C to +40°C without the need for seasonal adjustments.

F The sliding cover and pin cover conceal the main adjusting elements.

G The coordinating arm design with concealed fixings ensures smooth sliding when opening and closing the door.

H Version available with hold open device (D5210).

Adjustments to D5200 - D5210 series door closers

Adjustable closing power

Adjustable power EN 2-4

Adjustable closing speed

Adjustable final latch

Adjustable backcheck

CISA 1.D52x0.03.0.97

Pull side/door mounted

Closer body mounted on the door and slide track on the transom frame.

Final latch adjustment angle 10º.

D5200 door opening angle 180º max.
D5210 door opening angle 120º max.

CISA 1.D52x0.03.0.97

Pull side/door mounted

CISA 1.D52x0.03.0.97

Push side/transom mounted

Closer body mounted on the transom frame and slide track on the door

Final latch adjustment angle 10º.

D5200 door opening angle 180º max.
D5210 door opening angle 120º max.

CISA 1.D52x0.03.0.97

Push side/transom mounted

CISA 1.D52x0.03.0.97

Push side/door mounted

Closer body mounted on the door and slide rack on the transom frame

Final latch adjustment angle 10º.

D5200 door opening angle 140º max.
D5210 door opening angle 70º max.

CISA 1.D52x0.03.0.97

Push side/door mounted

CISA 1.D52x0.00.0.97

Pull side/transom mounted

Closer body mounted on the transom frame and slide track on the door

Final latch adjustment angle 10º.

D5200 door opening angle 140º max.
D5210 door opening angle 70º max.

CISA 1.D52x0.00.0.97

Pull side/transom mounted

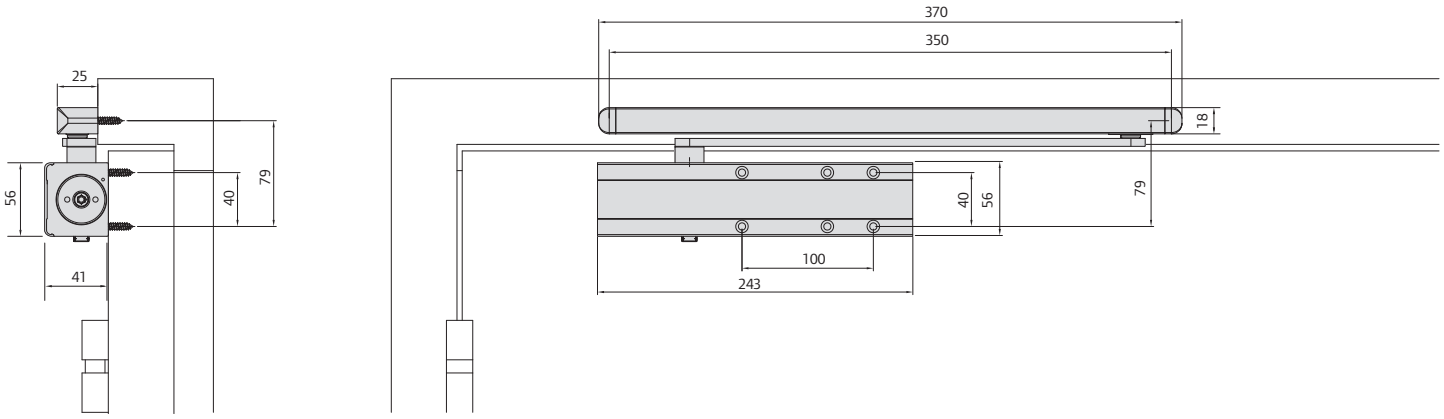

All dimensions are in mm

Technical features

The CISA D5200 series is CE marked to EN 1154 (performance) and certified to EN 1634-1 (fire for power sizes 3 and 4).

- Adjustable EN power sizes 1 - 4.
- CE marked.
- Power adjustment by regulator.
- Closing speed and final latch adjustment valves.
- Aluminium pressure die-cast body.
- Sliding cover plate.
- Backcheck fixed at 70º.
- 180º opening.
- Mechanical hold open device available on request.
- One body for all applications.
- Version with hold open device code D5210 S
- Two-year warranty.

The CISA D5200 series is available in the following finishes.

For the declaration of performance go to:

www.cisa.com

The CISA D5200 series is available in 2 models:

Standard model - Overhead door closer with sliding arm that conforms to the requirements of EN 1154, adjustable power sizes 1-4. The door closer and slide track are suitable for both left and right hand applications. The same body can be mounted on either the hinge or opposite side with the closer fixed to the door, so it is aesthetically more pleasing. CE marked model suitable for fire door applications.

Mechanical hold open model - Overhead door closer with sliding arm incorporating an adjustable mechanical hold open device. The hold open angle can be adjusted from 70º to 120º depending on the type of installation and allows the door to be manually released from the hold open position.

Mechanical hold open models must not be used on fire or smoke doors.

Product features		**Series code**	
EN door closer	max. door size [width - weight]	**D5200**	**D5210**
1	750 mm - 20 kg	■	■
2	850 mm - 40 kg	■	■
3	950 mm - 60 kg	■	■
4	1100 mm - 80 kg	■	■
Pull side door/push side transom mounting		■	■
Push side door/pull side transom mounting		■	■
Adjustable closing power EN size		1- 4	1- 4
Accufit template and Accufit mounting plate		■	■
Max angle of opening*		180°	120°
Separate closing speed and latch action adjustment		■	■
Fixed backcheck		■	■
Built-in temperature compensation valve		■	■
Mechanical hold open			■
Matching finish for arm, slide track and cover		■	■
Piastra per montaggio su porte tagliafuoco cod. 07153.15.0		□	
Dimensions (with trimplate L x D x H mm)		243 x 41 x 56	243 x 41 x 56
Sliding arm		370 x 25 x18	370 x 25 x18
Warranty period		2 years	2 years
CE classification		4 8 2-4 1 1 3	

■ present
□ on request

Specification:

Overhead door closer with sliding arm that conforms to the requirements of EN 1154, adjustable power sizes 2-4. The door closer and slide track are suitable for both left and right hand applications. The same body can be mounted on either the hinge or opposite side with the closer fixed to the door. CE marked model suitable for fire door applications. Version available with hold open device.

CISA S.p.A. reserves the right to make any change to the products illustrated in this catalogue without prior notice.

About Allegion™

Allegion (NYSE: ALLE) is a global pioneer in seamless access, with leading brands like CISA®, Interflex®, LCN®, Schlage®, SimonsVoss® and Von Duprin®. Focusing on security around the door and adjacent areas, Allegion secures people and assets with a range of solutions for homes, businesses, schools and institutions. Allegion had $2.7 billion in revenue in 2018, and sells products in almost 130 countries.

For more, visit **allegion.com**.

AXA ■ BRICARD ■ Briton ■ CISA ■ interflex
KRYPTONITE ■ NORMBAU ■ SimonsVoss technologies ■ TRELOCK

CISA SpA
Via Oberdan 42
48018 Faenza (RA) Italy

Ph. +39 0546 677111
Fax +39 0546 677150

Customer Service and Technical Support
+39 0546 188 0070

cisa.com
cisa.sales@allegion.com

ALLEGION™

© 2019 Allegion - CISA